SS52AHE THRU SS520AHE

5.0A Schottky Barrier Rectifier

Characteristics

I_o	5.0	A
V_{RRM}	20~200	V
I_{FSM}	100.0	A
V_F	0.55~0.90	V

Features

- Plastic package has Underwriters Laboratory Flammability Classification 94V -O
- For surface mounted applications in order to optimize board space
- Low power loss, high efficiency
- High surge capacity
- Ultra thin profile package for space constrained utilization
- Package suitable for automated handling
- Lead free in compliance with EU RoHS 2011/65/EU directive
- Green molding compound as per IEC61249 Std..(Halogen Free)

Package Outline Dimensions

SMA-HE

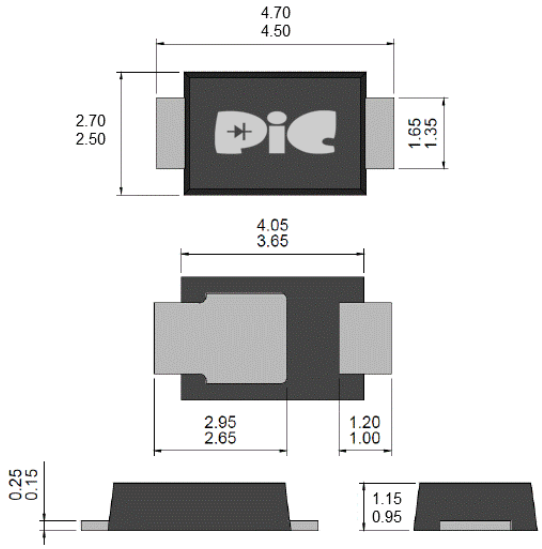

Unit : millimeters

Mechanical Data

- Case: SMA-HE Plastic
- Terminals: Solder per MIL-STD-750, Method 2026
- Polarity: Color band denotes cathode end

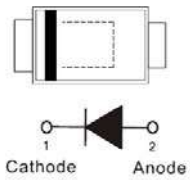

MAXIMUM RATINGS (TA=25°C unless otherwise noted)

PARAMETER	SYMBOL	SS52 AHE	SS53 AHE	SS54 AHE	SS55 AHE	SS56 AHE	SS58 AHE	SS510 AHE	SS515 AHE	SS520 AHE	UNIT
Maximum repetitive peak reverse voltage	V_{RRM}	20	30	40	50	60	80	100	150	200	V
Maximum RMS voltage	V_{RMS}	14	21	28	35	42	56	70	105	140	V
Maximum DC blocking voltage	V_{DC}	20	30	40	50	60	80	100	150	200	V
Maximum average forward rectified current	I_F	5.0									A
Peak forward surge current, 8.3ms single half sine-wave superimposed on rated load	I_{FSM}	100.0									A
Maximum Instantaneous Forward Voltage IF=5A @ 25°C	V_F	0.55			0.70		0.85		0.87	0.90	V
Maximum DC Reverse Current @ Tc=25°C at Rated DC Blocking Voltage @ Tc=100°C	I_R	0.5 10					0.2 5.0				mA
Typical Junction Capacitance(NOTE1)	C_j	300			210		170		150	110	pF
Typical Thermal Resistance(NOTE2)	$R_{\theta Ja}$ $R_{\theta JC}$	120 90									°C/W
Operating Temperature Range	T_J	-55 to +125					-55 to +150				°C
Storage Temperature Range	T_{STG}	-55 to +150									°C

NOTES:

1.Measured at 1.0MHZ and applied reverse voltage of 4.0V DC

2.Device mounted on FR-4 substrate, 1"*1", 2oz, single-sided, PC boards with 0.1"*0.15" copper pad.

Rating & Characteristic Curves

FIG. 1-TYPICAL FORWARD CURRENT DERATING CURVE

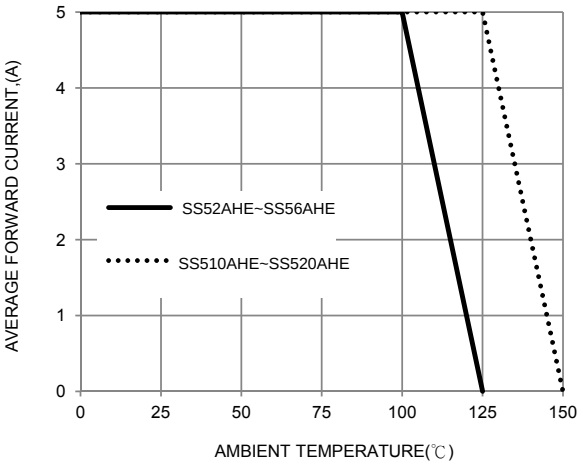

FIG. 2-TYPICAL FORWARD CHARACTERISTICS

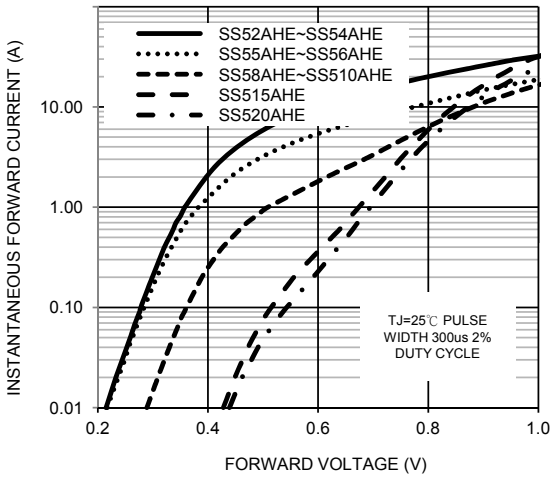

FIG. 3-MAXIMUM NON-REPETITIVE FORWARD SURGE CURRENT

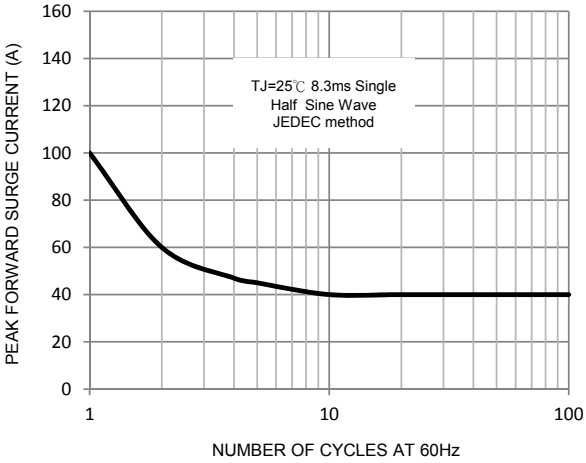

FIG. 4-TYPICAL REVERSE CHARACTERISTICS

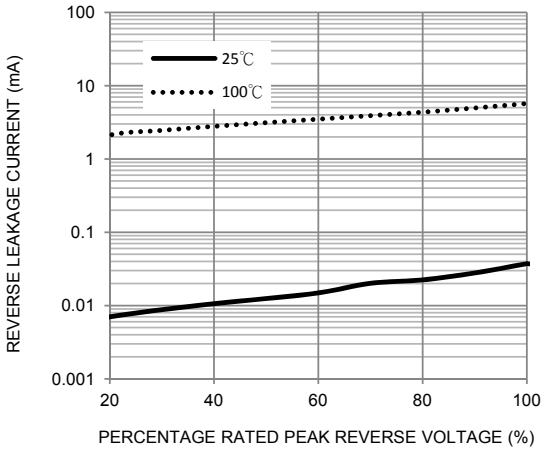

FIG. 5-TYPICAL JUNCTION CAPACITANCE

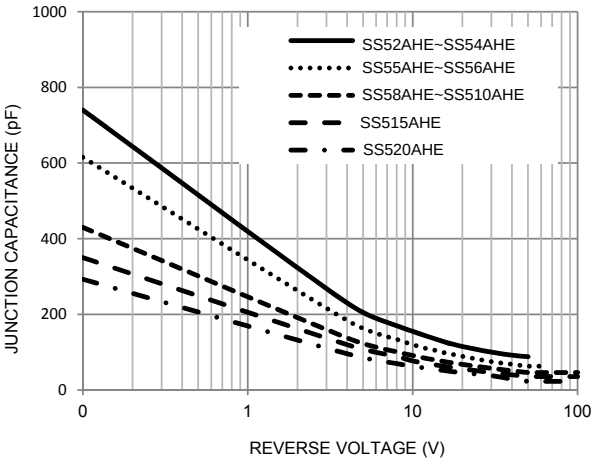

Pad Layout

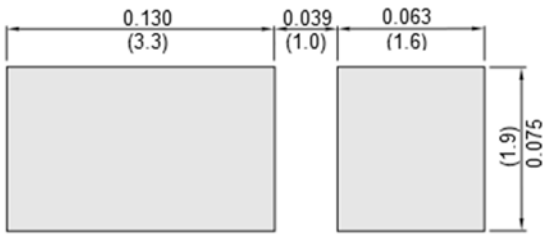

Unit: mm

Packaging Specifications

Package	W (mm)	A (mm)	B (mm)	C (mm)	d1 (mm)	d (mm)	E (mm)	F (mm)	P (mm)	P0 (mm)	P1 (mm)	T (mm)
SOD-123FL	8±0.2	2.00±0.1	3.85±0.1	1.1±0.1	1.0	1.50±0.1	1.75±0.1	3.5±0.05	4±0.1	4±0.05	2±0.05	0.23±0.05
SOD-123HE	8±0.3	2.00±0.1	4.00±0.1	1.45±0.1	1.0	1.55±0.1	1.75±0.1	3.5±0.05	4±0.1	4±0.10	2±0.05	0.23±0.10
SMAF	12±0.3	2.9±0.1	5.5±0.1	2.1±0.1	1.5	1.55±0.1	1.75±0.1	5.5±0.05	4±0.1	4±0.10	2±0.05	0.23±0.10
SMA-S	12±0.2	2.65±0.1	5.25±0.1	1.35±0.1	1.0	1.55±0.1	1.75±0.1	5.5±0.05	4±0.1	4±0.05	2±0.05	0.23±0.10
SMA-HE	12±0.2	2.65±0.1	5.25±0.1	1.35±0.1	1.0	1.55±0.1	1.75±0.1	5.5±0.05	4±0.1	4±0.05	2±0.05	0.23±0.10

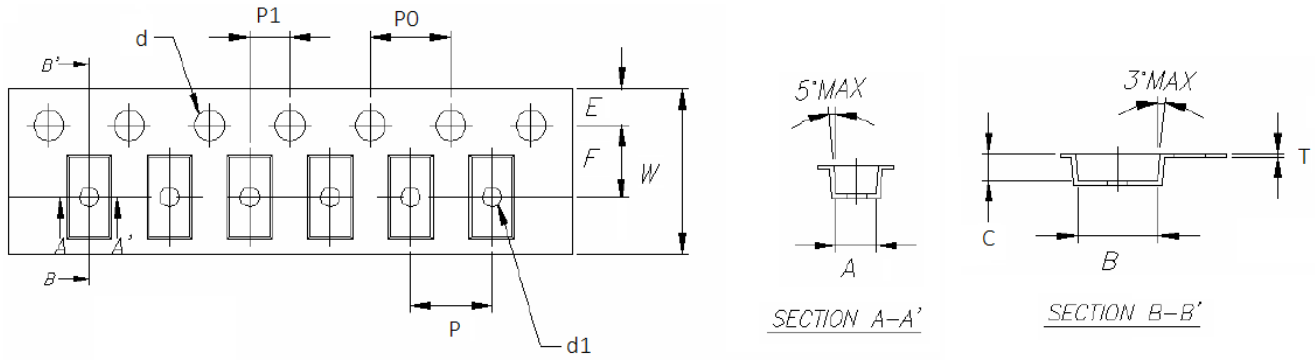

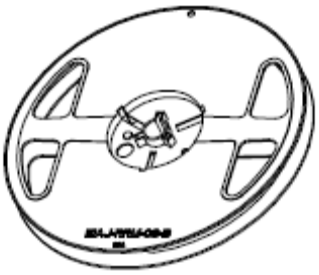

Package	D (max.) (mm)	D1 (min.) (mm)	D2 (mm)	G (min.) (mm)	W1 (min.) (mm)
SOD-123FL	178	50.0	13.0±0.2	8.4	11.4
SOD-123HE	178	50.0	13.0±0.2	8.4	11.4
SMAF	178	50.0	13.0±0.2	12.4	18.0
	330	50.0	13.0±0.2	12.4	18.0
SMA-S	178	50.0	13.0±0.2	12.4	18.0
SMA-HE	178	50.0	13.0±0.2	12.4	18.0

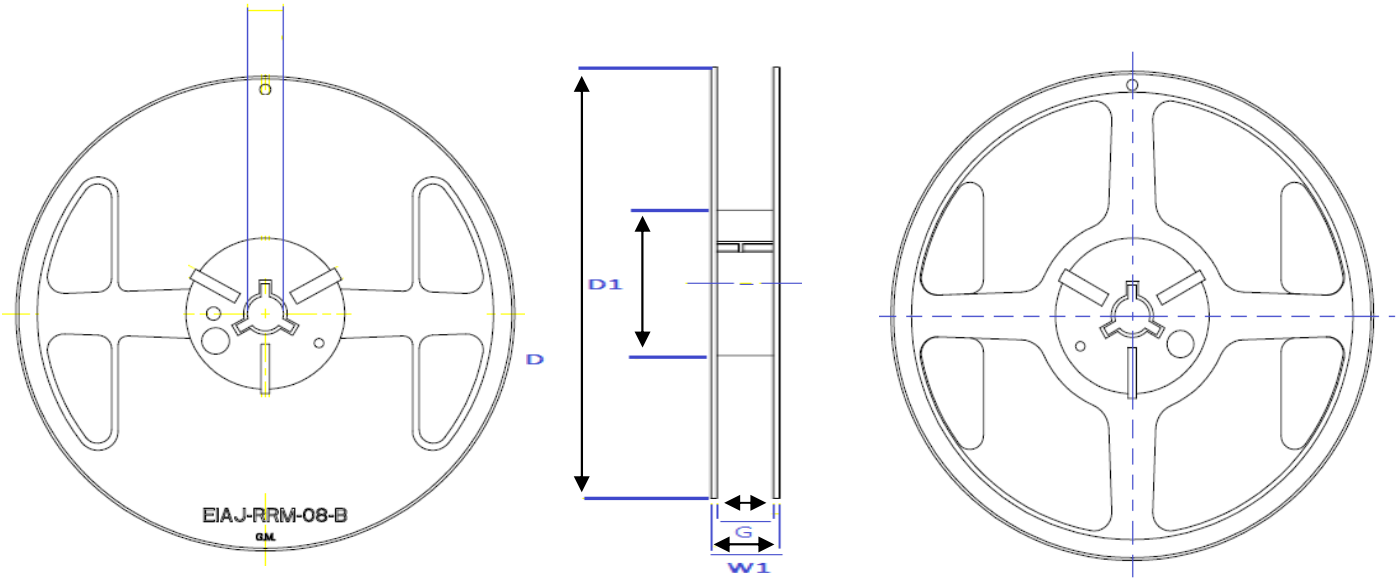

Recommand IR Reflow Soldering Thermal Profile

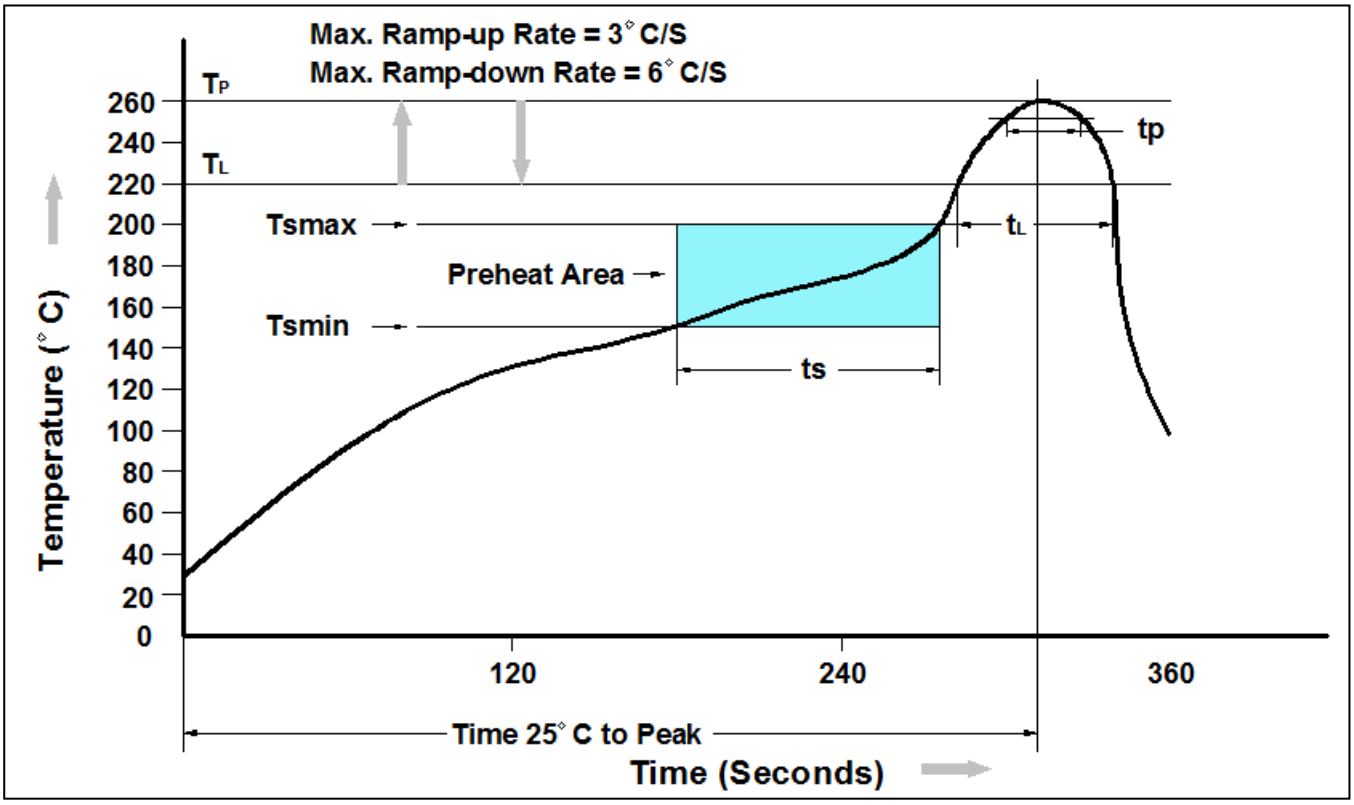

Profile Feature	Pb-Free Assembly Profile
Temperature Min. (Tsmin)	150°C
Temperature Max. (Tsmax)	200°C
Time (ts) from (Tsmin to Tsmax)	60-120 seconds
Average Ramp-up Rate (t_L to t_P)	3°C/second max.
Liquidous Temperature (TL)	217°C
Time (t_L) Maintained Above (TL)	60 – 150 seconds
Peak Temperature	260°C +0°C / -5°C
Time (t_P) within 5°C of actual Peak Temperature	30 seconds
Ramp-down Rate (T_P to T_L)	6°C/second max
Time 25°C to Peak Temperature	8 minutes max.

Ordering Information

Part Number	Description	Quantity
SS52AHE THRU SS520AHE	SMA-HE Reel	3000 pcs

DISCLAIMER

- The information in this document and any product described herein are subject to change without notice and should not be construed as a commitment by Paceleader, Paceleader reserve the right to make changes to the information in this document.

- Though Paceleader make effort to improve product quality and reliability, Product can malfunction and fail due to their inherent electrical sensitivity and vulnerability to physical stress, it is the responsibility of the customer, when utilizing Paceleader products, to comply with the standards of safety in making a safe design for entire system and to avoid situation in which a malfunction or failure., In developing a new designs, customer should ensure that the device which shown in this documents are used within specified operating ranges.

- The information contained herein is presented only as a guide for the applications of our products. No responsibility is assumed by Paceleader for any infringements of patents or other rights of the third parties which may result from its use.